SIEMENS

SIMATIC TI505

S5 UNILINK Adapter Installation and Operation

User Manual

Order Number: PPX:TIWAY-8126-2
Manual Assembly Number: 2587871-0065
Second Edition

MANUAL PUBLICATION HISTORY

SIMATIC TI505 – S5 UniLink Adapter Installation and Operation
Order Manual Number: PPX:505–8116–2
Refer to this history in all correspondence and/or discussion about this manual.

Event	Date	Description
Original Issue	09/92	Original Issue (2800120–0001)
Second Issue	04/94	Second Issue (2800120–0002)

LIST OF EFFECTIVE PAGES

Pages	Description	Pages	Description
Cover/Copyright	Second		
History/Effective Pages	Second		
iii — x	Second		
1-1 — 1-5	Second		
2-1 — 2-8	Second		
3-1 — 3-12	Second		
A-1 — A-11	Second		
B-1 — B-9	Second		
C-1 — C-3	Second		
Index-1 — Index-3	Second		
Registration	Second		

Contents

Appendix C S5 Adapter/CP 525 Error Codes

List of Figures

List of Tables

Preface

Purpose of this Manual

This manual is intended to help you accomplish the tasks required to install and operate the S5 UniLink™ Adapter with the SIMATIC S5 Personality Interface Module (PIM).

This manual assumes that you are already familiar with the contents of the *TIWAY I™ Systems Manual* and the *UNILINK Adapter Installation & Operation Manual*.

Related Manuals

The information in this manual is supplemented by the following manuals.

- *TIWAY I Systems Manual* (PPX:TIWAY–8101)
- *TIWAY I UNILINK Host Adapter User's Manual* (PPX:TIWAY–8121)
- *UNILINK Adapter Installation and Operation Manual* (PPX:TIWAY–8106)

The *TIWAY I System Manual* provides more information on the installation and operation of your TIWAY I network. The *UNILINK Adapter Installation & Operation Manual* details the installation and operation of the UNILINK Adapter. Refer also to the user manuals for any other TIWAY I network devices that you have installed or will be installing.

Additional information is found in the following SIMATIC S5 manuals.

- *COM 525 Manual, Volumes 1 and 2* (6ES5 998–1DB21)
- *Automating with the SIMATIC S5–135U* (A19100-L531-F505-X-7600)

The *COM 525 Manuals* provide complete information on installing and programming your CP 525 module. The *Automating with the SIMATIC S5–135U* manual provides a thorough background of the SIMATIC S5 135U programmable controller (PLC).

NOTE: Throughout this manual, *all references to the **CP 525** module apply equally to the **CP 524** module*, as both of these models are compatible with the S5 UniLink Adapter.

S5 UniLink Models Available

The S5 UniLink Adapter is available in four models, offering a choice of two physical interfaces for network communications: the Local Line or RS-232C interfaces, in different voltage versions. Table 1 lists the model numbers, the type of interface, and the supply voltage for each model.

Table 1 S5 UniLink Models

Model Number	Network Port	Supply Voltage
PTI:505–7115	Dual Local Line	120 VAC
PTI:505–7116	Dual RS-232C/423	120 VAC
PTI:505–7117	Dual Local Line	240 VAC
PTI:505–7118	Dual RS-232C/423	240 VAC

Technical Assistance

If you have any questions about this product or need technical assistance, contact your Siemens Industrial Automation, Inc. distributor. If you need assistance in contacting your U.S. distributor, call 1-800–964-4114.

Chapter 1

Product Overview

1.1 Description of the S5 UniLink Adapter

Connecting a SIMATIC S5 Controller to a TIWAY Network

The S5 UniLink Adapter allows you to connect an S5 Programmable Controller to a TIWAY I network, as shown in Figure 1-1. The S5 Adapter provides the hardware and software that customizes the interface to an S5 PLC through a SIMATIC CP 525 Communications Processor.

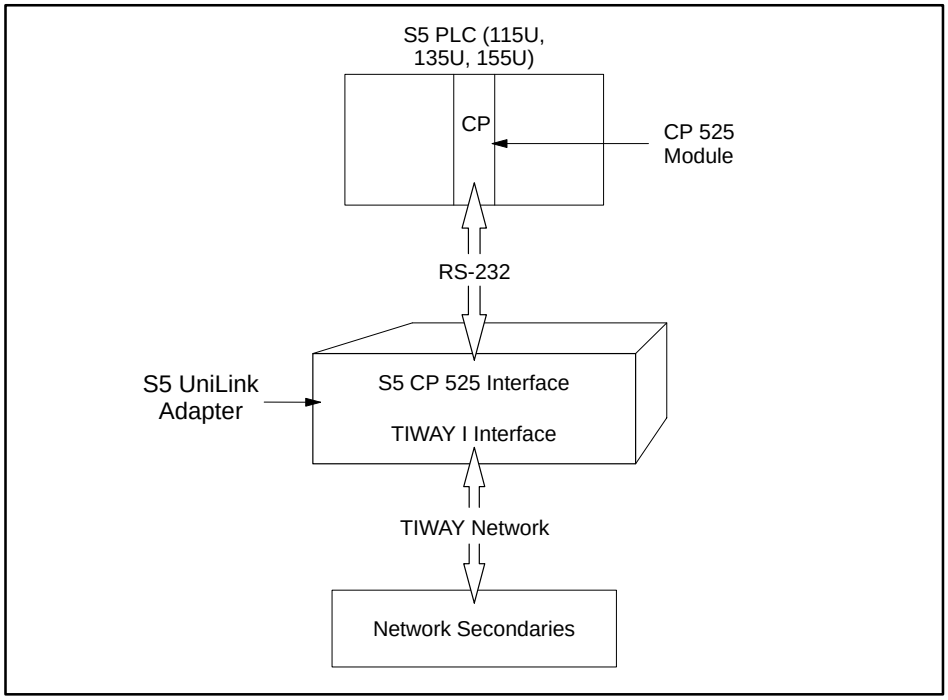

I003637

Figure 1-1 S5 UniLink Adapter Interface

S5 UniLink Adapter Components

The following components are required for connecting an S5 programmable controller to TIWAY.

- **UniLink Adapter:** includes an RS-232-compatible interface port that supports RK 512 protocol with the 3964R transfer procedure (for interface to the CP 525 module) via the S5 PIM; also includes two TIWAY I interface ports (see Figure 1-2).
- **S5 Personality Interface Module (PIM):** a plug-in module that contains the software needed to customize the UniLink Adapter as an S5 interface (see Figure 1-3).

NOTE: The only way an S5 UniLink Adapter can communicate with an S5 controller is through a CP 525 or a CP 524 module.

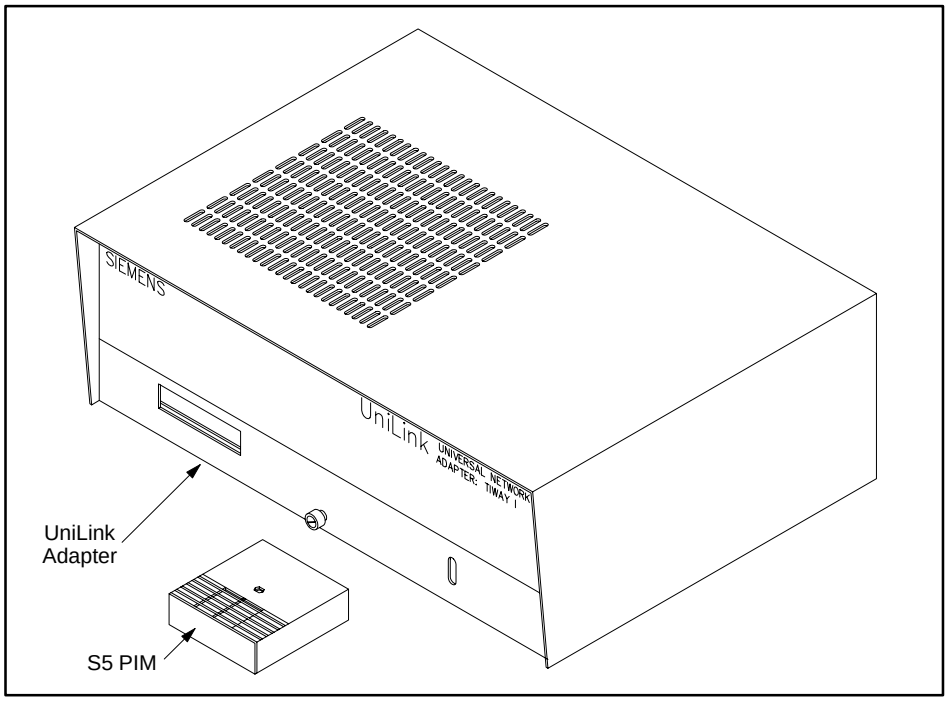

A000653

Figure 1-2 S5 UniLink Adapter

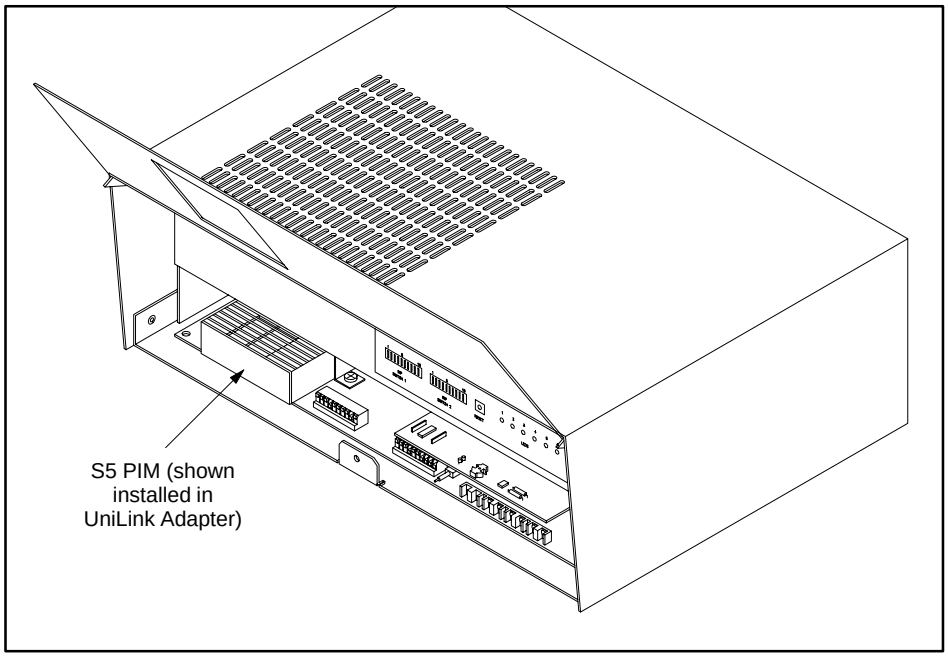

A000653a

Figure 1-3 S5 Personality Interface Module (PIM)

1.2 TIWAY I System Characteristics

TIWAY Network

TIWAY I is a bus structure Local Area Network (LAN) designed for industrial environments. The TIWAY I network connects a series of PLCs and other devices to one or more host computers.

SIMATIC® TI500™/SIMATIC® TI505™ controllers are connected to a TIWAY I network through Network Interface Modules (NIMs). The PM550™ PLC can be connected with a Computer Interface Module (CIM), but it limits the configuration choices. The UniLink Adapter is a TIWAY I interface device that allows other devices, such as the following, to be connected to a TIWAY I network.

- Robots
- Computer numerical controlled machines
- Non-TI500/TI505 programmable controllers
- Intelligent instruments
- Computer equipment

Adding the S5 UniLink Adapter to the TIWAY Network

The S5 UniLink Adapter provides a communication link between the TIWAY I network and the S5 family of PLCs. Figure 1-4 shows an example of a TIWAY I network which includes the S5 Adapter.

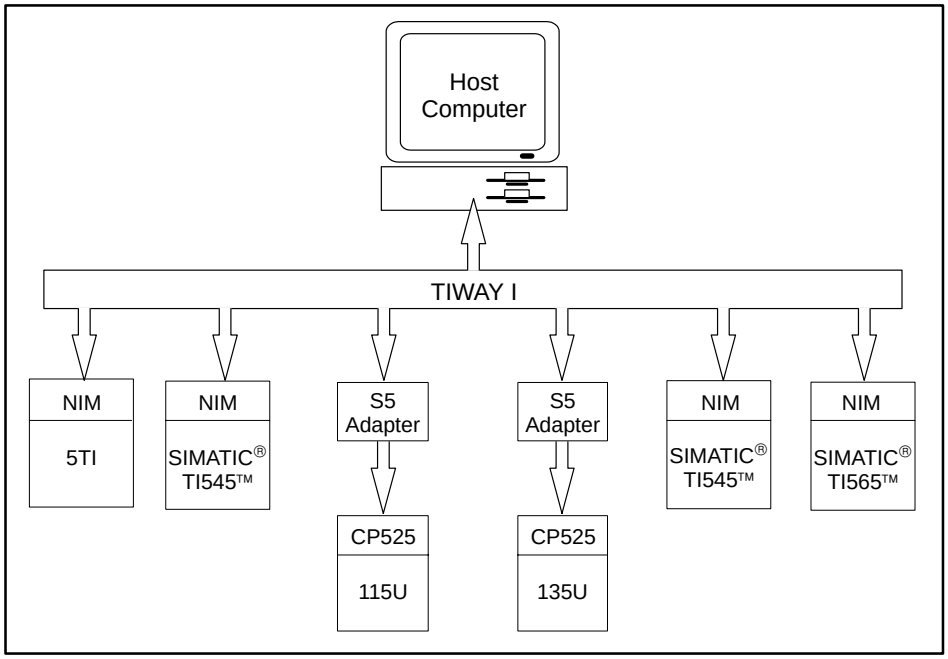

Figure 1-4 S5 UniLink Adapter in a TIWAY I Network

Primitive Command Set

Primitives are high level commands used by the TIWAY I network to access data types in different secondary devices. The TIWAY I network primitives supported by the S5 UniLink Adapter are a subset of the entire TIWAY primitive command set, as represented in Figure 1-5. Refer to Appendix B for a description of the primitives supported.

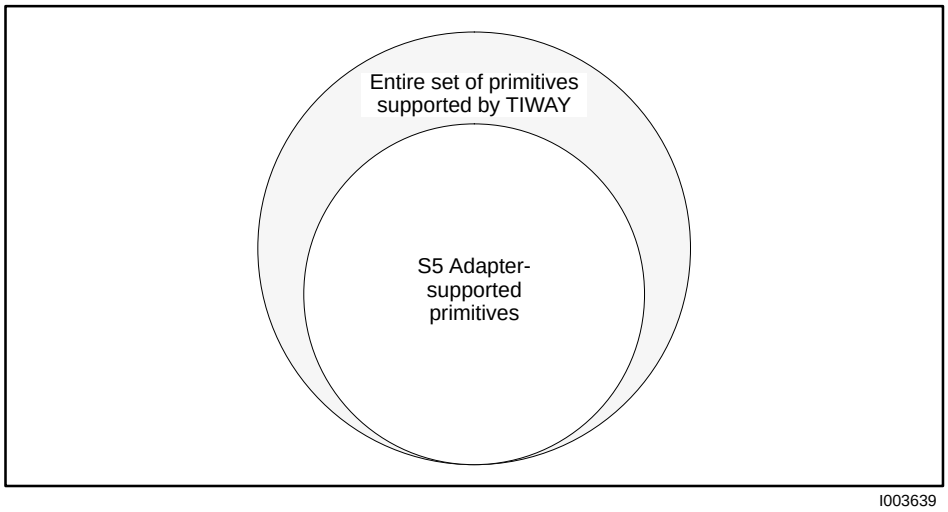

Figure 1-5 S5 UniLink Adapter Primitives

S5 Memory Types

Due to significant differences in the internal memory structure and architecture between the TI505 PLCs, and the S5 PLCs, only a subset of the memory types is supported, as represented in Figure 1-6. Refer to Appendix A for a description of the memory types supported.

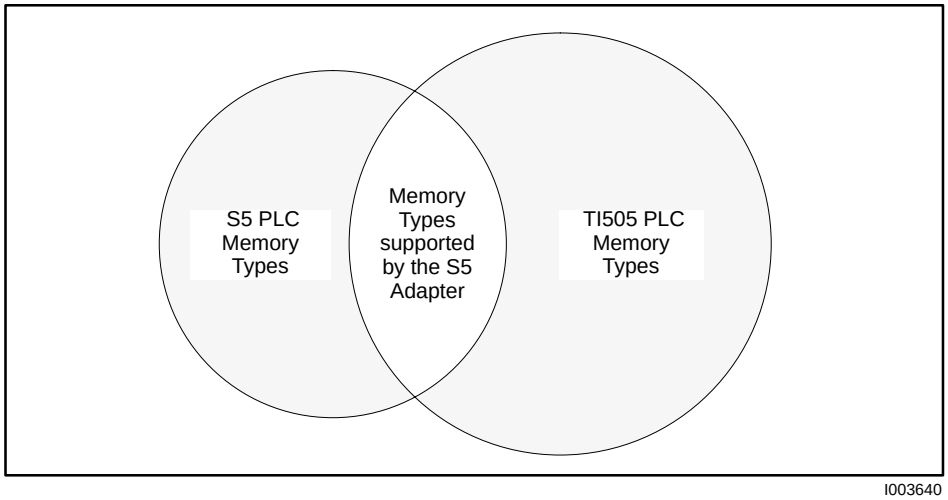

Figure 1-6 S5 UniLink Adapter Memory Types

Chapter 2

Installation and Set-up

2.1 Overview

The S5 UniLink Adapter as a TIWAY Secondary

This chapter provides an introduction to the operation and set-up of the S5 UniLink Adapter.

During normal operation, requests are sent over the TIWAY network to the S5 UniLink Adapter; thus it functions in the same manner as any other secondary in the network. Appendix B lists the TIWAY primitives supported by the S5 Adapter.

The majority of requests issued to the S5 Adapter are to obtain memory locations from the S5 PLC. Appendix A lists the memory translations from the TI505 (TT types) to the S5 memory types.

Setting Up the S5 UniLink Adapter

To connect and set up the S5 UniLink Adapter properly, follow these steps.

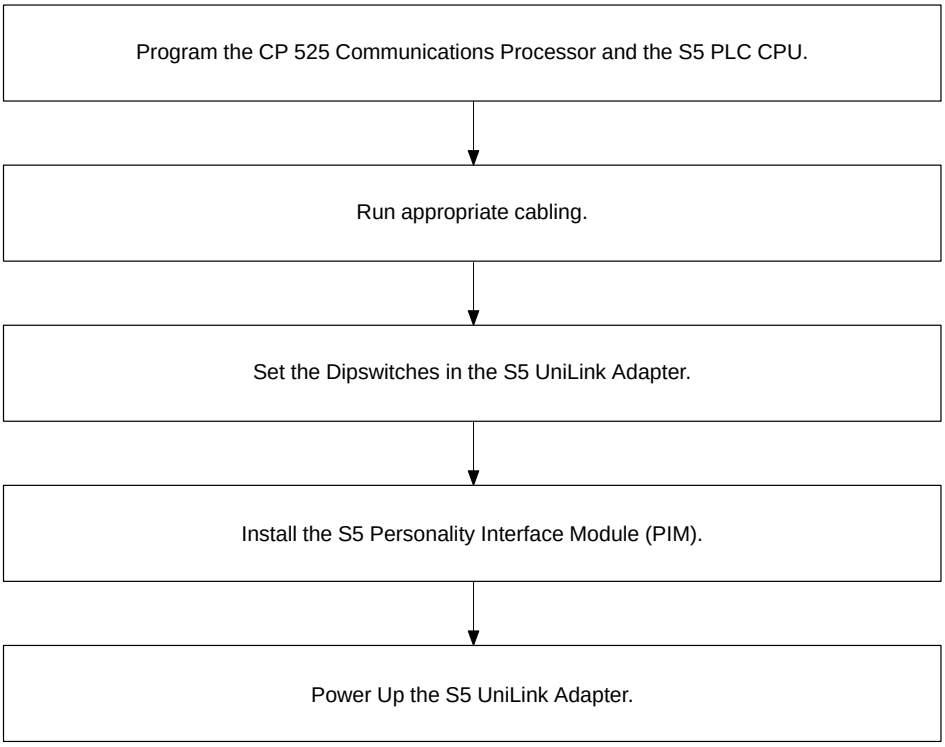

Figure 2-1 Main Steps for Setting up the S5 UniLink Adapter

Programming the CP 525

For the S5 UniLink Adapter to establish communications with the CP 525 module, the following prerequisites must be met. Use the PG programmer to load these parameters.

- The STEP 5 user program in the CPU must include the data handling blocks **SEND ALL** and **RECEIVE ALL**.
- The CP 525 user program of the CP module must include the RK 512 Interpreter and the 3964R Transfer Procedure.

NOTE: Remember to program the communications parameters (9600 or 19,200 baud, 8 bits, even parity, and 1 stop bit) in the CP 525 module.

No jobs in the CP module job block are required for the connection to the S5 UniLink Adapter.

For more information on setting up the CP 525 module and the controller CPU, refer to the CP 525 Communications Processor manuals.

2.2 Cabling the Components

S5 Interface Overview

The S5 UniLink Adapter communicates with a CP 525 Communications Processor module located in an S5 PLC through a serial binary data interface using EIA RS-232-C control, data, and timing signals.

Basic Cable Connections

Connect the S5 PLC and the S5 UniLink Adapter as shown in Figure 2-2.

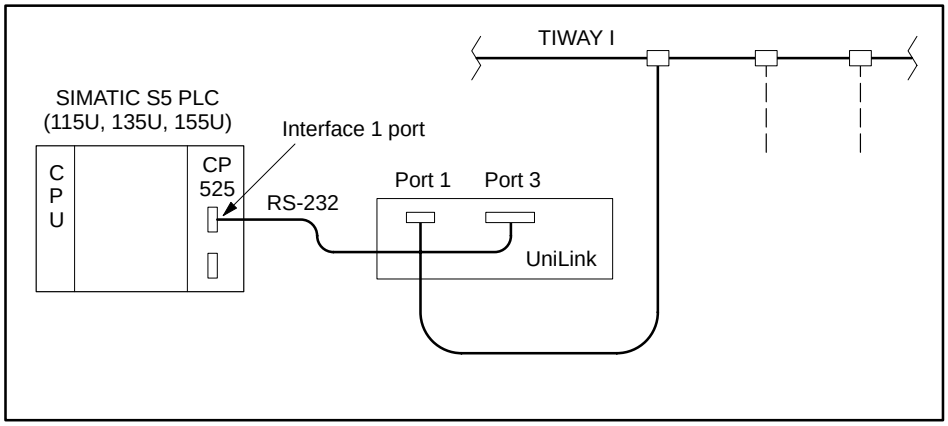

Figure 2-2 S5 UniLink Adapter Interface

- Plug the RS-232 cable into **Port 3** of the S5 UniLink Adapter and the **Interface 1** port of the CP 525 module.
- Connect the appropriate TIWAY line into the TIWAY port(s) on the S5 UniLink Adapter.

Port 3 on the S5 UniLink Adapter is a 25-pin female D connector wired as Data Terminal Equipment (DTE) for connection to the CP 525 Communications Processor interface port (also DTE).

S5 Interface Pin Assignments

The pin assignments for the S5 interface are shown in Figure 2-3. Any pins not listed in the diagram should remain unused in order to prevent damage to the communications processor or the S5 UniLink Adapter.

NOTE: Do not exceed 50 feet in length for the communications cable.

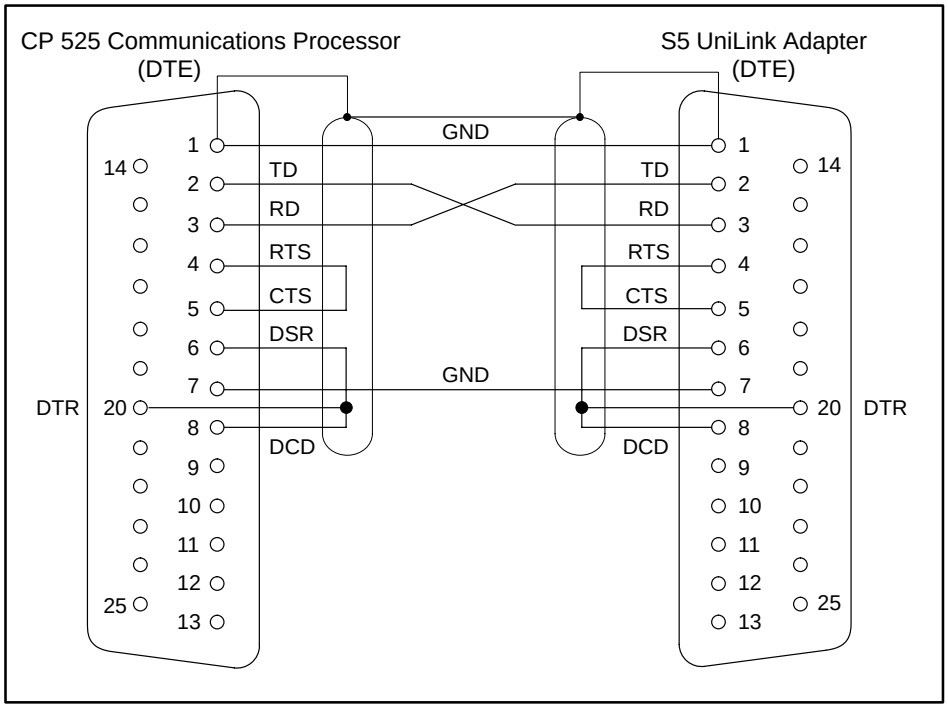

Figure 2-3 Pin Assignments for Connecting S5 Adapter to CP 525

2.3 Setting the Dipswitches

Dipswitch Location

Two banks of dipswitches are provided on the S5 UniLink CPU board, accessible by opening the cover plate on the face of the unit (see Figure 2-4).

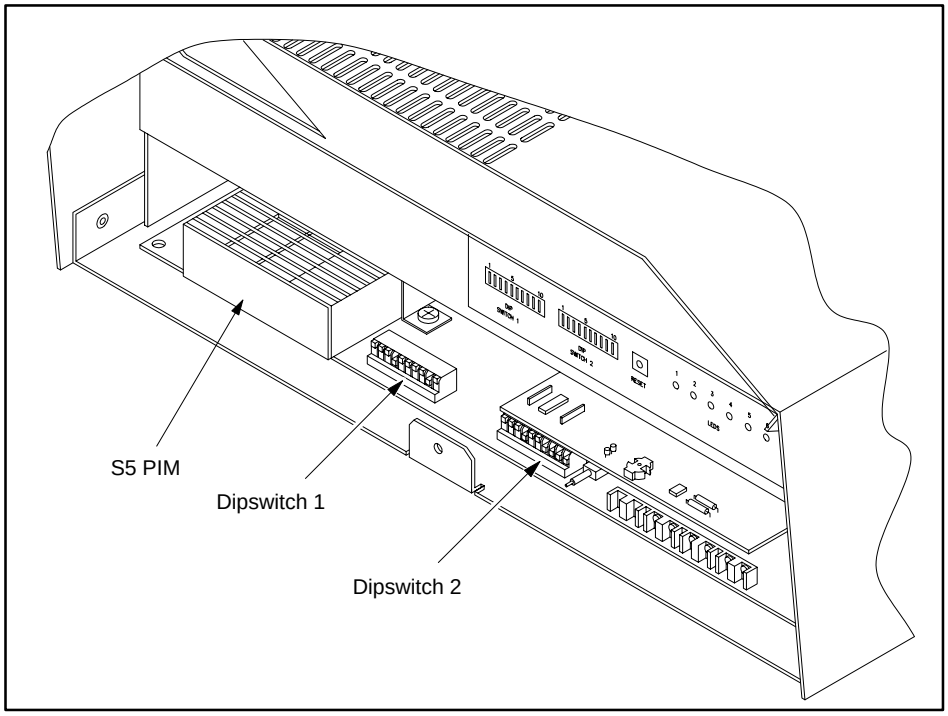

A000653a
I003643

Figure 2-4 S5 UniLink Adapter Dipswitch Location

Dipswitch 1

Dipswitch 1 is used to configure the S5 Interface Port and the TIWAY network port, as shown in Figure 2-5.

The data rate of the S5 UniLink Adapter interface port can be set for either 9600 or 19,200 baud using switch 3 on Dipswitch 1 (see Figure 2-5). The remaining communications parameters are fixed as follows: 8 data bits, even parity, and 1 stop bit. Be sure to program the attached CP 525 module to accept the S5 UniLink Adapter's communication parameters.

NOTE: Set switches 1 and 2 to correspond to the CPU number with which you want the S5 UniLink Adapter to communicate. Refer to the CP 525 manuals for more information about the CPU number.

Dipswitch 2

Dipswitch 2 is used primarily to configure the secondary address of the S5 UniLink Adapter (see Figure 2-6). Refer to your *UNILINK Adapter Installation and Operation Manual* for dipswitch settings.

Figure 2-5 shows the settings for Dipswitch 1.

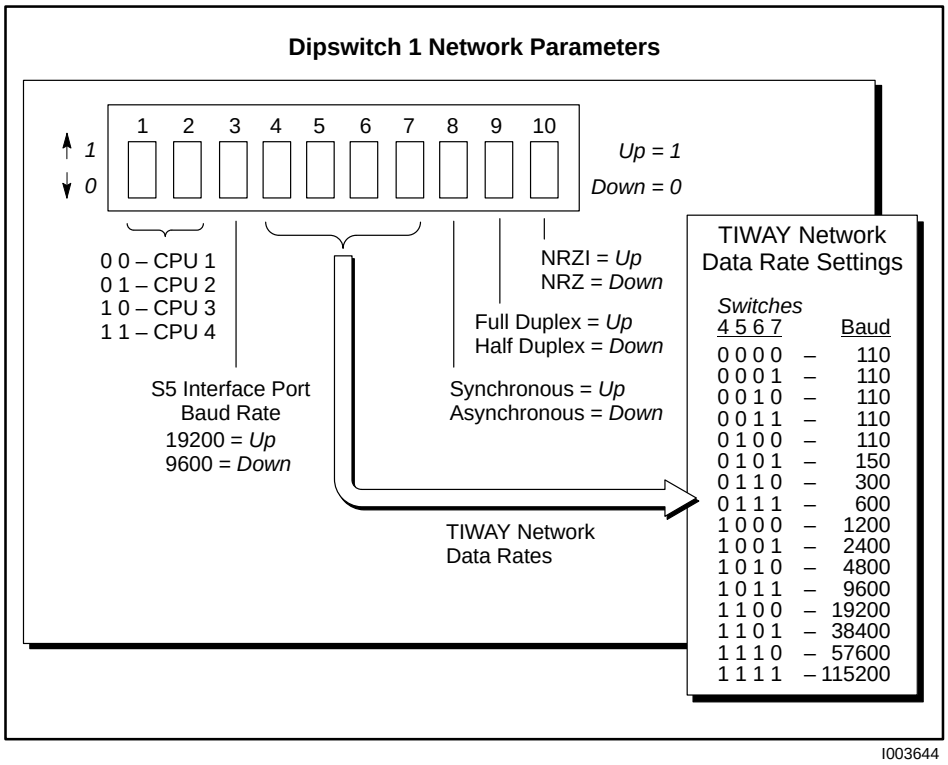

Figure 2-5 S5 UniLink Dipswitch 1 Settings

Figure 2-6 shows the settings for Dipswitch 2.

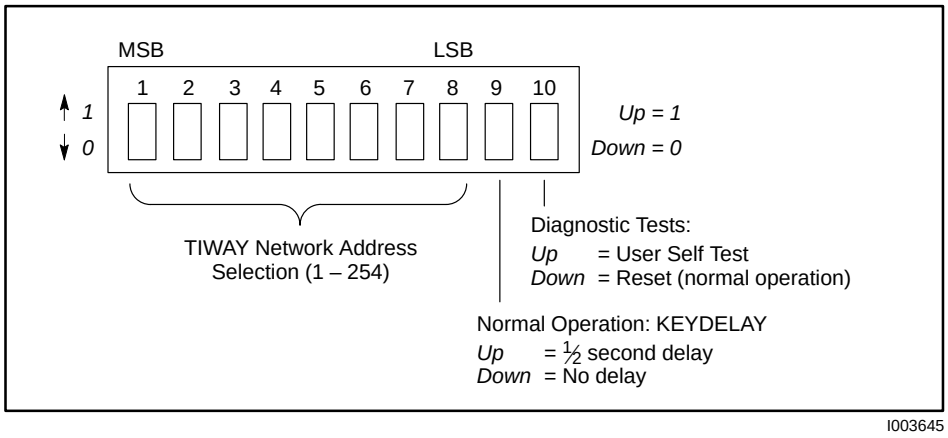

Figure 2-6 S5 UniLink Dipswitch 2 Settings

2.4 Installing the S5 Personality Interface Module

Installing the PIM

The S5 Personality Interface Module contains the software required to establish an interface with the S5 series of PLCs.

Although the faceplate of the S5 UniLink Adapter contains an opening that shows the label on the S5 PIM, it is not large enough to allow you to insert or remove the PIM while the faceplate is closed.

⚠ CAUTION

The door and case are designed to ground you when you touch them, discharging static electricity before you handle any of the Adapter's internal components. As with any static-sensitive devices, use proper handling procedures to avoid exposing the module to sources of electrostatic discharges. Keep the Adapter door closed securely when access to the PIM and dipswitches is not required.

Open the hinged faceplate by unscrewing the knob and lifting up; you now have access to the module socket for installing or removing the PIM, as well as the dipswitches, a reset switch, and six LEDs (see Figure 2-7).

⚠ CAUTION

To avoid possible damage to the PIM, disconnect AC power to the S5 UniLink Adapter before you install or remove the PIM.

The S5 PIM fits in the socket in one direction only—label side up. Insert the module and press firmly to ensure that the contacts are securely connected.

Power-Up

Refer to your *UNILINK Adapter Installation and Operation Manual* for proper power-up and diagnostic testing procedures.

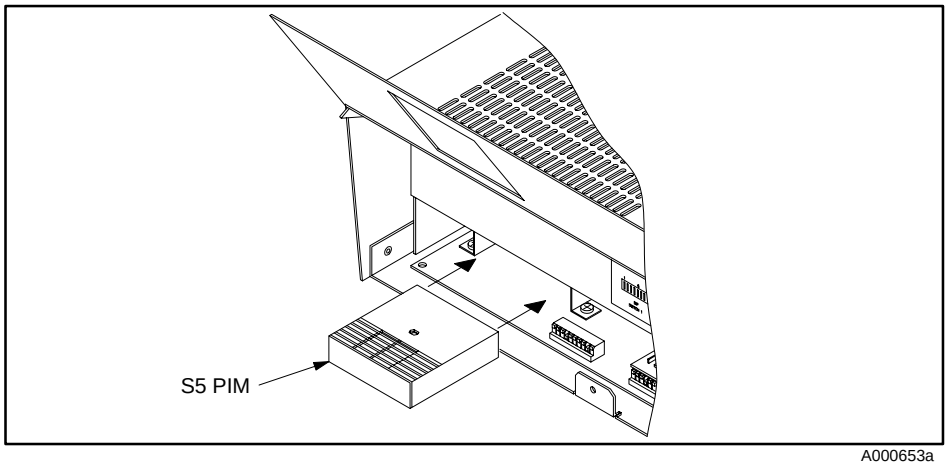

A000653a
I003646

Figure 2-7 Installing the S5 PIM

Chapter 3

TIWAY I Network Communication

3.1 Local Line Interface Ports

Overview

The S5 UniLink Adapter is available in four models, offering a choice of two physical interfaces for network communications: Local Line or RS-232-C interfaces, in different voltage versions. Table 3-1 lists the model numbers, the type of interface, and the supply voltage for each model.

Table 3-1 S5 UniLink Adapter Models

Model Number	Network Port	Supply Voltage
PTI:505–7115	Dual Local Line	120 VAC
PTI:505–7116	Dual RS-232C/423	120 VAC
PTI:505–7117	Dual Local Line	240 VAC
PTI:505–7118	Dual RS-232C/423	240 VAC

More information on the media types can be found in the *TIWAY I Systems Manual* and in the *UNILINK Adapter Installation and Operation Manual*.

Local Line Interface Ports

The Local Line interface to TIWAY I is a female 9-pin D connector. Two ports are provided (see Figure 3-1) for the following purposes.

- Port 1 is the primary network port.
- Port 2 provides support for redundant media transmission when Ports 1 and 2 are connected to a redundant twisted-pair cable network.

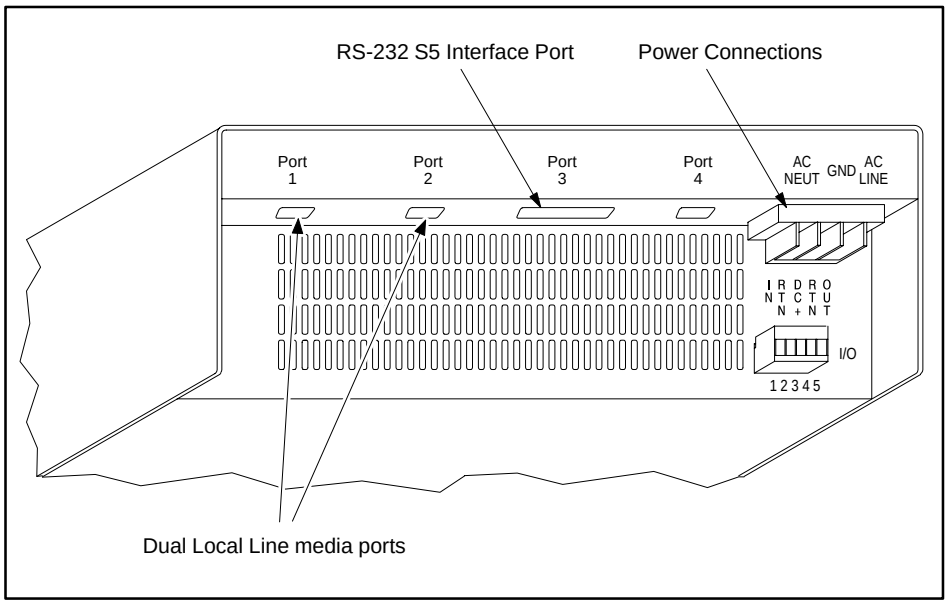

A000654

Figure 3-1 Local Line Interface Ports

Local Line Pin Assignments

The pin assignments for these ports are listed in Table 3-2.

Table 3-2 Local Line Connector Pin Assignments

Pin	Name	Description
1		Reserved
2		Reserved
3	Shield	Cable shield and signal common
4		Reserved
5		Reserved
6	LLM+	Positive biased signal line
7		Reserved
8		Reserved
9	LLM–	Negative biased signal line

The Local Line interface uses shielded, twisted-pair cable, such as Belden® 9860 or Belden 9271.

Local Line Bus Structure

Figure 3-2 shows the TIWAY I bus structure with the network trunkline cable, which can extend up to 25,000 feet with droplines up to 100 feet in length.

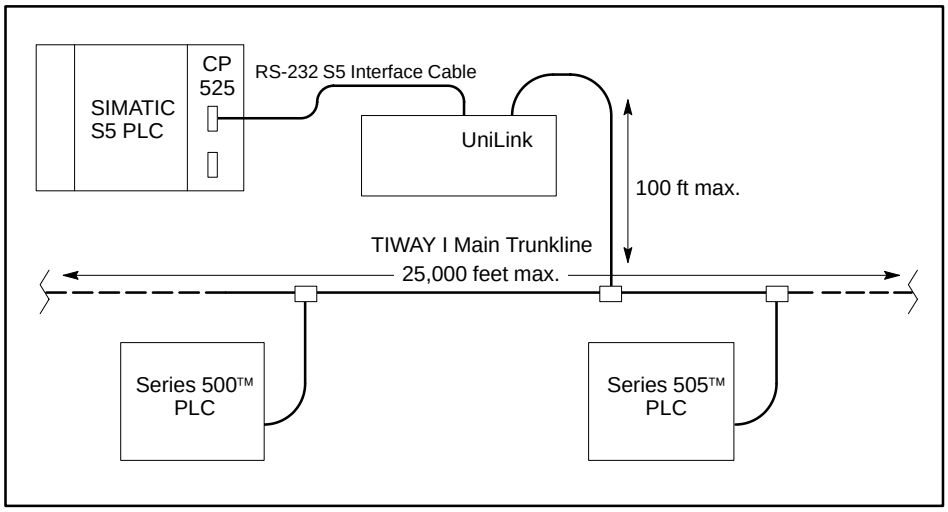

Figure 3-2 TIWAY I Bus Structure

Figure 3-3 is a chart showing the maximum cable distances compared to the number of stations on the TIWAY I network.

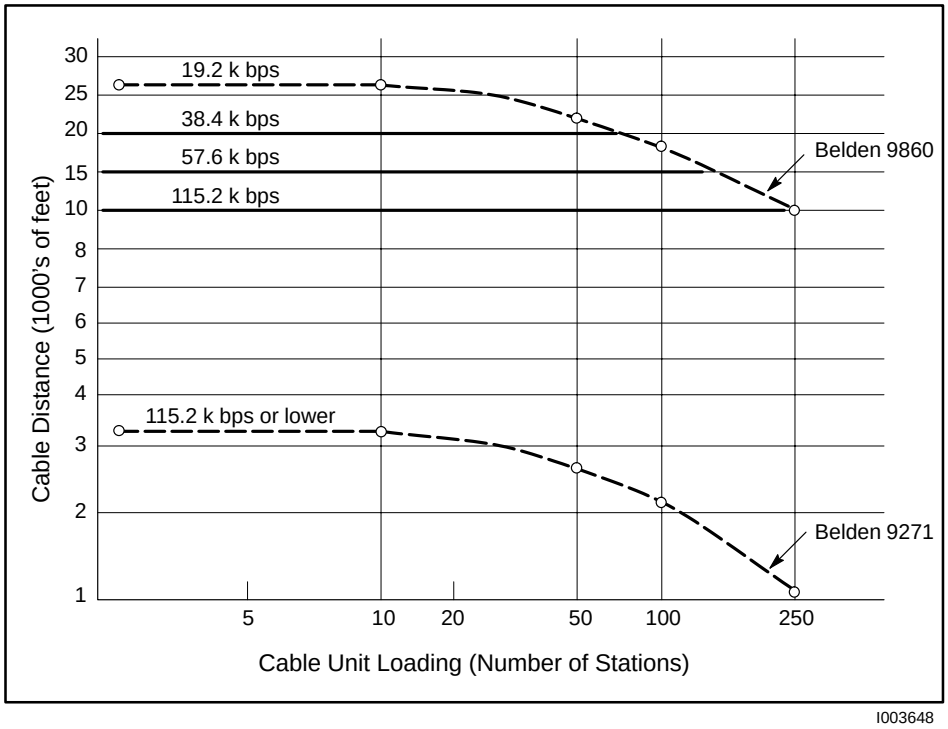

Figure 3-3 Number of Local Line Secondaries vs. Cable Distance

Local Line Data Transmission Parameters

Signals are coupled between the transmission line and the transmit/receive circuits to provide a level of rejection to normal AC power frequency interference and other noise sources.

Information is transferred asynchronously on the TIWAY I twisted-pair media at user-selectable data rates of 110, 150, 300, 600, 1200, 2400, 4800, 9600, 19.2K, 38.4K, 57.6K, and 115.2K bits per second, in half-duplex mode and NRZI encoding.

NOTE: The Local Line interface does *not* support synchronous operation or NRZ encoding.

3.2 Modem Interface Ports

RS-232-C Modem Interface Ports

The modem interface is a standard Type E DTE configuration as defined in the EIA RS-232-C standard that uses EIA RS-423 drivers. This interface uses a female 25-pin D-type connector on both Ports 1 and 2 as shown in Figure 3-4.

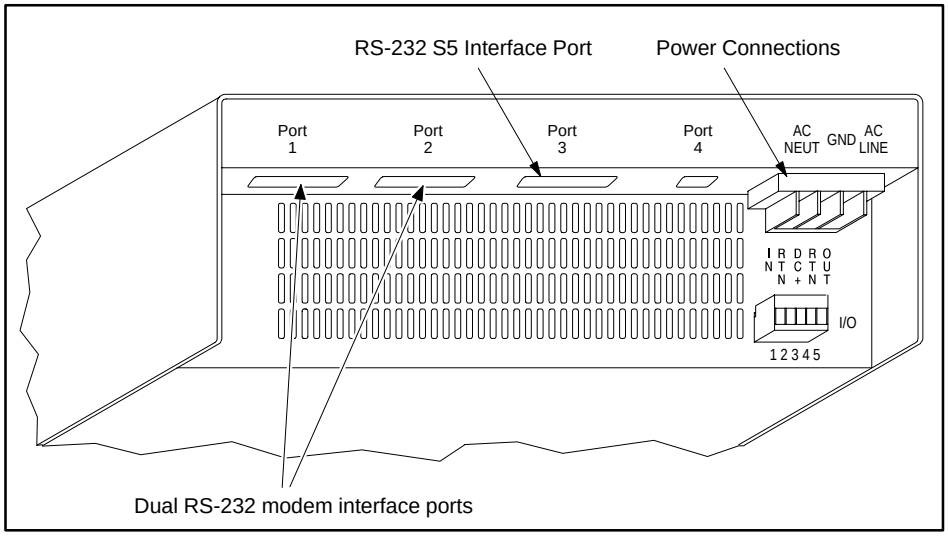

A000654

Figure 3-4 RS-232/RS-423 Modem Interface Ports

Modem Port Pin Assignments

These two ports support redundant media transmission when connected to redundant modem networks. The pin assignments shown in Table 3-3 are supported. All other pins should be left vacant to prevent damage which may be caused by nonstandard pin usage.

Table 3-3 RS-232/RS-423 D Connector Pin Assignments

Pin No.	CCITT	Circuit	Description
1	101	AA	Protective Ground
7	102	AB	Signal Ground
2	103	BA	Transmit Data
3	104	BB	Receive Data
4	105	CA	Request to Send (RTS)
5	106	CB	Clear to Send (CTS)
6	107	CC	Data Set Ready (DSR)
20	108/2	CD	Data Terminal Ready (DTR)
8	109	CF	Data Carrier Detect (DCD)
15	114	DB	Transmitter Signal Element Timing
17	115	DD	Receiver Signal Element Timing

The line drivers and receivers meet the requirements for the RS-423 and RS-232-C standards. The modem interface is user-selected for either asynchronous or synchronous operation at data rates of 110, 150, 300, 600, 1200, 2400, 4800, 9600, 19.2K, 38.4K, 57.6K, and 115.2K bits per second.

Modem Specifications

For communication applications longer than the 25,000 feet limit of the Local Line interface, you need to use modems.

The modems used must be non-intelligent and have data transparency. Non-intelligent refers to the class of modems that do *not* have an internal command set. Modems such as the Hayes Smartmodem™ and compatibles *do* have an internal command set and should not be used. (Generally, modems that meet the Bell 103, 202, and 208 specifications will work, but the Bell 212A class modems will not.) In addition to being non-intelligent, the modems must support data transparency, which means no start bits, no stop bits, and no parity. This is necessary because TIWAY I uses the bit-oriented HDLC protocol to transfer information between devices. Most short-haul modems are non-intelligent and provide data transparency.

You also have a choice of using either NRZ or NRZI encoding with the modem interface. NRZI is recommended because of its self-clocking properties. (Please refer to the appropriate TIWAY documentation for specific details regarding the use of modems.)

Runaway Transmitter Recovery

The S5 UniLink Adapter is equipped with a timeout or runaway transmitter recovery mechanism which ensures that the transmitter does not remain turned on longer that twice the time required to send the maximum length message. If the transmission exceeds this limit, the Adapter will perform a hardware reset, discarding all macro buffers and any outstanding directives.

NOTE: The hardware reset restores the UniLink Adapter to the initialized or power-up state. At this point, the Adapter will have to be reconfigured and the network restored to its operating state.

3.3 Redundant Media Transmission

Alternate Channel Port

Most TIWAY I conformant devices support a redundant media scheme which provides active access to a device over one of two independent media channels.

Port 2 on both Local Line and RS-232 models of the S5 UniLink Adapter provides support for redundant media transmission. If access to a device fails on one channel, communications can be automatically or manually switched to the alternate channel. This type of a circuit is illustrated in Figure 3-5.

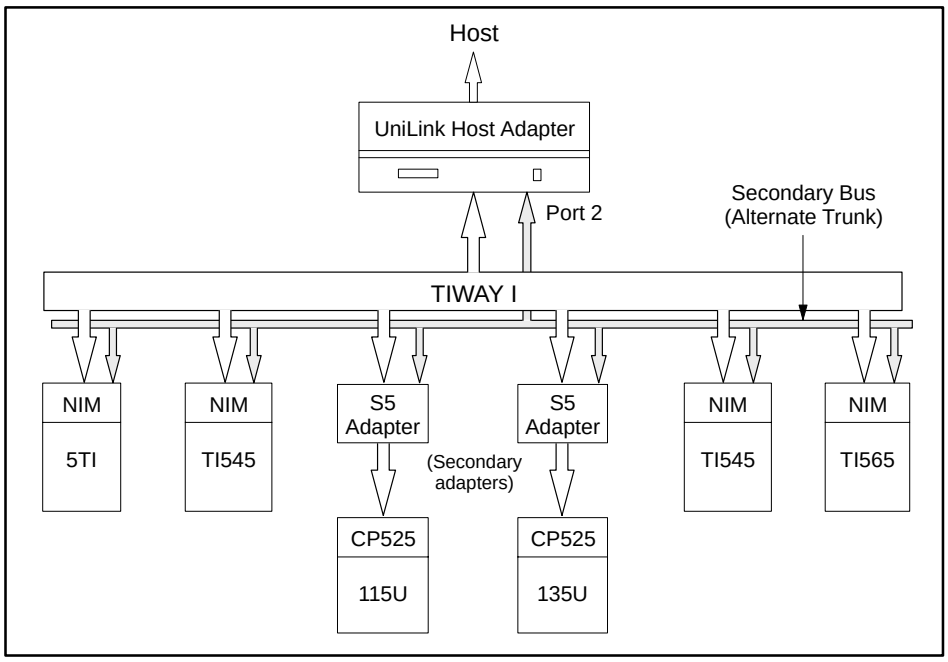

I003649

Figure 3-5 Redundant Media Circuit

NOTE: Redundant media is provided to improve a network's mission reliability. However, the Adapter cannot use the dual media ports to access two independent networks.

3.4 TIWAY I HDLC Network Protocol

The TIWAY I network uses the HDLC protocol in the unbalanced, normal response mode (UNRM) for transmission of commands and responses. In this mode, a single Network Manager (primary) controls the flow of messages between secondary devices.

Information flows between the primary and secondaries inside HDLC I-Frames or information frames. The destination of the frame is specified by the address field, the nature of the frame by the control field, and any data specified by the information field. The TIWAY I primitive requests and responses are encapsulated inside HDLC I-Frames according to the format shown in Figure 3-6.

Flag	Address	Control	Information	FCS	Flag

Primitives

Figure 3-6 HDLC Information Frame

3.5 S5 Interface Port Communications

Overview

In automation engineering, data must often be exchanged between programmable controllers or between a programmable controller and a central process computer. The data exchange can be implemented using the communications processor CP 525 with its interpreter RK 512 and the procedure 3964R. This means that the programmable controllers of the S5 U family (115U, 135U, 155U) can be hooked up with the S5 UniLink Adapter through one of these CP modules.

S5 Interface Communications

Each S5 UniLink Adapter with an S5 PIM is connected to a CP 525 Communications Processor through the S5 interface port with an RS-232 interface. The S5 Adapter uses the RK 512 protocol with the 3964R transfer procedure to establish communications with the CP 525 module.

Refer to Chapter 2 for a brief description of the steps necessary to set up the CP 525 Communications Processor.

For more information, consult the CP 525 Communications Processor manuals.

RK 512 Computer Link with 3964R Procedure

Port 3 on the S5 UniLink Adapter assumes communications with the attached CP 525 module using the 3964R transfer procedure. Sections 3.6 and 3.7 discuss the steps involved in transmitting and receiving using the 3964R procedure.

3.6 Transmitting with the 3964R Procedure

NOTE: The term *procedure* refers to the device initiating the transfer, and the term *partner* refers to the receiving device.

Link Establishment

To establish the link, the procedure sends the control character STX. If the partner replies within the time allowed of 2000 ms, the procedure starts the transmission. If the partner answers with NAK, any other character (except DLE), or if there is a timeout, then the attempt to establish a link has failed. After a total of six unsuccessful attempts, the procedure gives up, signals there is an error establishing the link, and sends the character NAK to the partner.

Transmission

If the link is successfully established, the information data to be sent to the partner is immediately sent to the partner at the selected data rate. The partner monitors the time between the characters as it receives them. The time between two characters must not exceed the character delay time of 220 ms.

While the information data is being transmitted, the partner sends the character NAK, the procedure breaks off and repeats it as previously described. If any other character is received, the procedure waits for the character delay time (220 ms) to elapse and then sends NAK to reset the partner. Then the procedure begins the transmission again with the link establishment STX.

Each DLE character sent is found in the transmission as two DLE characters (DLE doubling), i.e., the data (10H) is sent twice.

After sending the information data the procedure adds the characters DLE, ETX, and BCC as end identifier and waits for an acknowledgment.

Acknowledgment

If the partner sends the character DLE within the time allowed (2000 ms), the information data was received without errors. If the partner replies with any other character (except DLE) or there is a timeout, the procedure begins the link establishment again with STX. After a total of six unsuccessful attempts to send the information data, the procedure breaks off the attempt, signals an error, and sends NAK to the partner.

3.7 Receiving with the 3964R Procedure

Link Establishment

After a successful transmission of the data information has been made to the partner, the procedure enters the idle state awaiting the link to be established by the partner. If the procedure receives any character (except STX) while in the idle state, it waits until the character delay time (220 ms) has elapsed and then sends a NAK character. Then a repetition is expected. If after a total of six unsuccessful attempts, or if the repetition by the partner does not take place within the waiting time of 4 seconds, the procedure breaks off reception and signals an error.

If the procedure receives the character STX it answers with DLE. The procedure now expects a data reception from the partner.

Receiving

After each character received, the procedure waits for the next character to arrive within the character delay time (220 ms). If there is a character timeout, the NAK character is sent to the partner, and a repetition is expected. If after a total of six unsuccessful attempts, or if the repetition by the partner does not take place within the waiting time of 4 seconds, the procedure breaks off reception and signals an error.

If the procedure recognizes the character sequence DLE ETX and BCC, it stops receiving. It compares the received block check character (BCC) with longitudinal parity. If the block check character is correct and no other errors have occurred during reception, the procedure sends a DLE. If the BCC does not correspond, NAK is sent to the partner. Then a repetition is expected. If the block can not be received without errors following six attempts or if the repetition by the partner does not take place within the waiting time of 4 seconds, the procedure breaks off and signals an error.

If transmission errors occurs during the reception (characters lost, frame error, parity error), reception is continued until the link is terminated and then NAK is sent to the partner. Then a repetition is expected as previously described.

Initialization Conflict

If a device receives a send request (STX character) from its partner and does not answer within the acknowledgment delay time (2000 ms) with DLE or NAK, but also sends the character STX, there is an initialization conflict. Both devices are attempting to perform a send job. The device with the lower priority desists and answers with the DLE character. The device with the higher priority sends its data as previously described. After the link has been terminated, the lower priority device can then run its send job. The S5 UniLink Adapter will assume higher priority, and the CP module should be configured with the lower priority.

The CP module will act on a request/response basis, with all requests coming from the S5 UniLink Adapter. Thus the S5 PLC should be programmed never to send any requests through the CP module to the UniLink Adapter. If such a request occurs, the S5 UniLink Adapter will ignore the request, causing a timeout to occur.

Longitudinal Parity (BCC Comparison)

The BCC error check byte is calculated by an exclusive-OR of all data bytes contained in the message. The terminating characters DLE and ETX are also included in the BCC calculation.

For Additional Information

For more detailed information concerning the RK 512 protocol and 3964R transfer procedure, as well as available commands, please refer to the manuals shipped with your CP 525 module.

Appendix A

SIMATIC S5 Memory Mapping

A.1 Memory Type Overview

Overview

This appendix describes how the TI505 data types map to S5 data types and vice versa. Each of the eleven S5 data types supported by the CP 525 module is described in detail as seen through the CP module in relation to each one's TI500/TI505 counterpart.

Quick Reference Memory Chart

Table A-1 represents the equivalent memory types that correspond between TI500/TI505 PLCs and S5 PLCs. Because of the significant differences in the internal memory structure and architecture between the two PLCs, these equivalents represent a subset of the total sets of memory types available to each.

Table A-1 TI500/TI505 vs. S5 Memory Types

TT Memory Type	TI500/TI505 Description	S5 CP 525 Memory Type	S5 Description
01	V-Memory	D	Data Block Memory (DB)
02	K-Memory	X	Extended Data Block Memory (DX)
03	Unpacked Input Discretes	E	Inputs (I)
04	Unpacked Output Discretes	A	Outputs (Q)
05	Unpacked Control Registers	M	Flag Memory (F)
06	Packed Input Discretes	E	Inputs (I)
07	Packed Output Discretes	A	Outputs (Q)
08	Packed Control Registers	M	Flag Memory (F)
0F	Timer/Counter Current	T	Timer Memory (T)
14	Timer Current	T	Timer Memory (T)
16	Counter Current	Z	Counter Memory (C)
F0	IEEE Floating-point V. Memory	D	Data Block Memory (DB)
F1	IEEE Floating-point K. Memory	X	Extended Data Block Memory (DX)

A.2 Floating-Point Conversion

Description

The TI500/TI505 floating-point representation is different from the S5 representation; therefore, the S5 PIM will have to perform a conversion. The sign bit of the TI500/TI505 floating-point is the same as the sign bit of the S5 mantissa. You can determine how the exponent and mantissa values are derived from the equations below.

NOTE: The IEEE floating-point supported by the TI500/TI505 PLCs is only a subset of the IEEE standard. Please refer to a Series 505 PLC specification for this information.

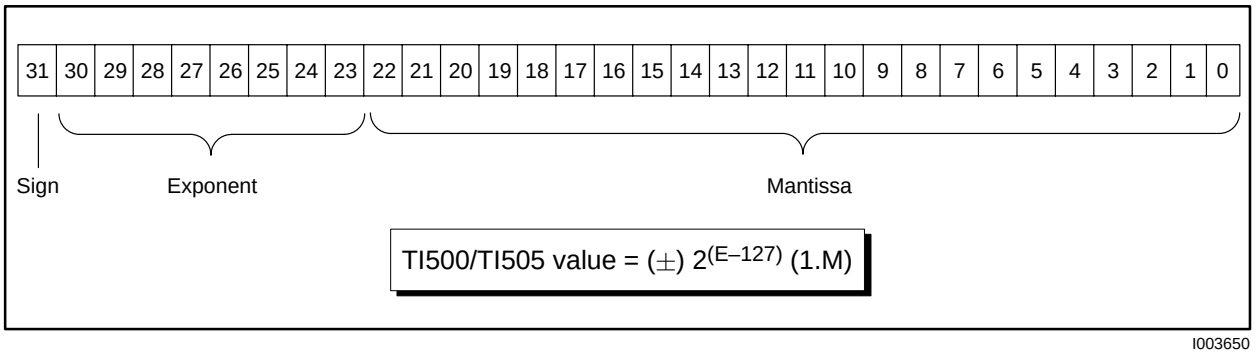

Figure A-1 TI500/TI505 IEEE Floating-Point Value

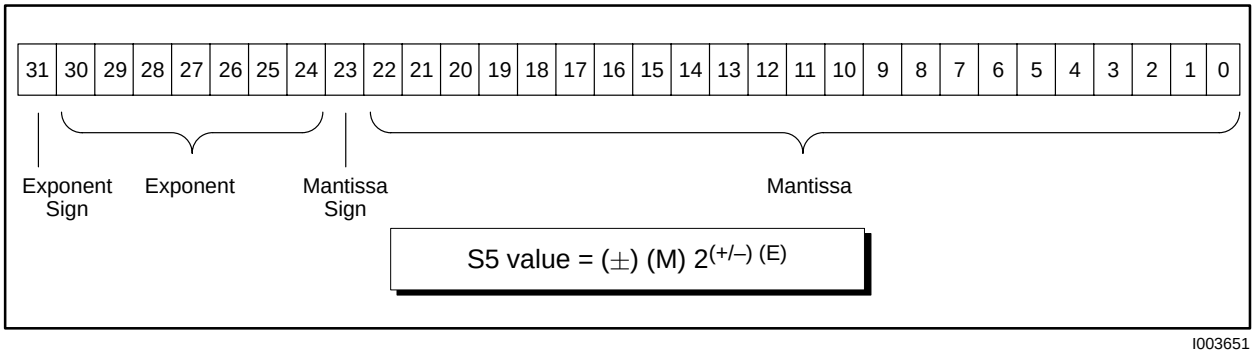

Figure A-2 S5 Floating-Point Value

A.3 Data Block — CP 525 ‘D’ Type

Description

The S5 Data Block memory as accessed through the CP 525 module refers to memory that is organized by 256 blocks of 256 words (16 bits) for a total of 64K words of memory. Because the Data Block memory is user-configurable in the CPU, the S5 PIM assumes no knowledge of the accessible memory ranges for each block. The TT type that maps to this type of S5 memory is variable or V-memory (TT type 01).

NOTE: If a TIWAY request is out of range, the exception returned will be of the form 80DD.

Address Mapping

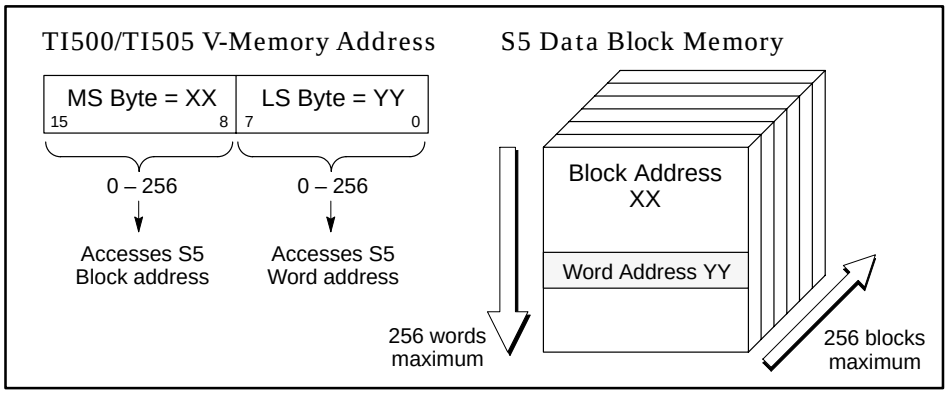

S5: DB = XX (hex), DW = YY (hex) in Data Block ‘D’ memory.
TI500/TI505: XXYY (hex) in variable V-memory.

Value Conversion

The value conversion method is identical value, meaning the binary value in the S5 memory location corresponds exactly to the value in the TI500/TI505 memory location.

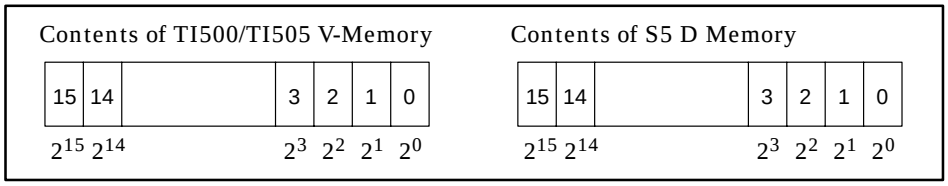

Floating-Point Support

The TI500/TI505 IEEE floating-point TT Type F0 or ‘V.’ (V-dot) is also supported for the S5 Data Block Memory. The address mapping method remains the same, with the implied length of 32 bits. The floating-point value conversion performed by the S5 PIM is described in Section A.1.

Reading and Writing

Reading the CP 525 D memory with the TT types 01 and F0 is supported. Writing to the CP 525 D memory with TT types 01 and F0 is also supported.

A.4 Extended Data Block — CP 525 'X' Type

Description

The S5 Extended Data Block memory, as accessed through a CP module, refers to memory that is organized by 256 blocks of 256 words (16 bits) for a total of 64K words of memory. Because the extended data block memory is user configurable in the CPU, the S5 PIM assumes no knowledge of the accessible memory ranges for each block. The TT type that maps to this type of S5 memory is constant or K-memory (TT type 02).

NOTE: If a TIWAY request is out of range, the exception returned will be of the form 80DD.

Address Mapping

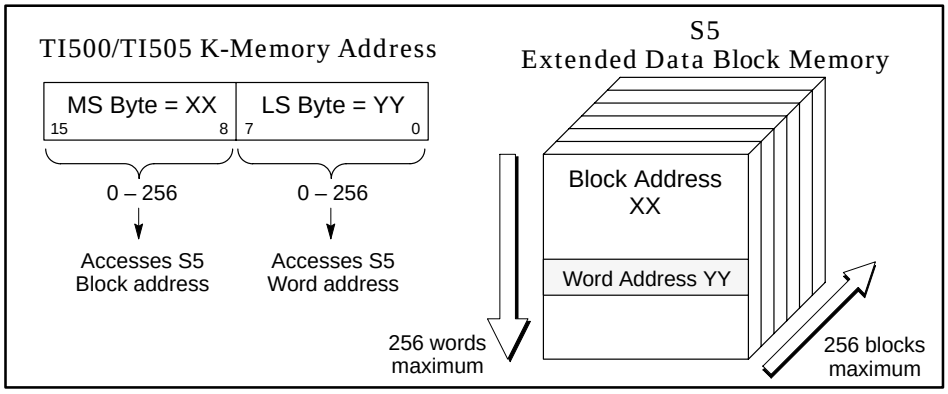

S5: DB = XX (hex), DW = YY in Extended Data Block 'X' memory.
TI500/TI505: XXYY (hex) in constant K-memory.

Value Conversion

The value conversion method is identical value, meaning the binary value in the S5 memory location corresponds exactly to the value in the TI500/TI505 memory location.

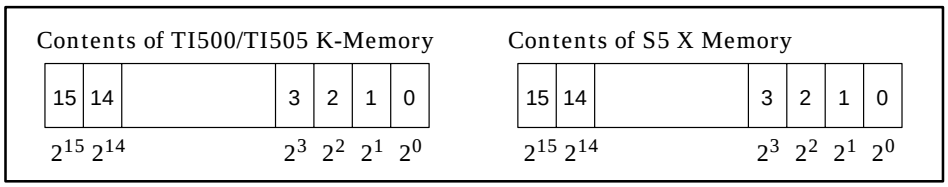

Floating-Point Support

The TI500/TI505 IEEE floating-point TT Type F1 or 'K.' (K-dot) is also supported for the S5 Extended Data Block Memory. The address mapping method remains the same, with the implied length of 32 bits. The floating-point value conversion performed by the S5 PIM is described in Section A.1.

Reading and Writing

Reading the CP 525 X memory with the TT types 02 and F1 is supported. Writing to the CP 525 X memory with TT types 02 and F1 is also supported.

A.5 Input Bytes — CP 525 'E' Type

Description

The S5 Input Bytes memory, as accessed through a CP module, refers to memory that is organized in 128 contiguous bytes of memory. Because the process input image memory area (E memory) is accessible only if a corresponding I/O module is in use, the S5 PIM assumes no knowledge of the accessible memory area of the process input image. The TT types that map to this type of S5 memory are Packed Input Discretes (TT Type 06) and Unpacked Input Discretes (TT Type 03).

NOTE: If a TIWAY request is out of range, the exception returned will be of the form 80DD.

Address Mapping

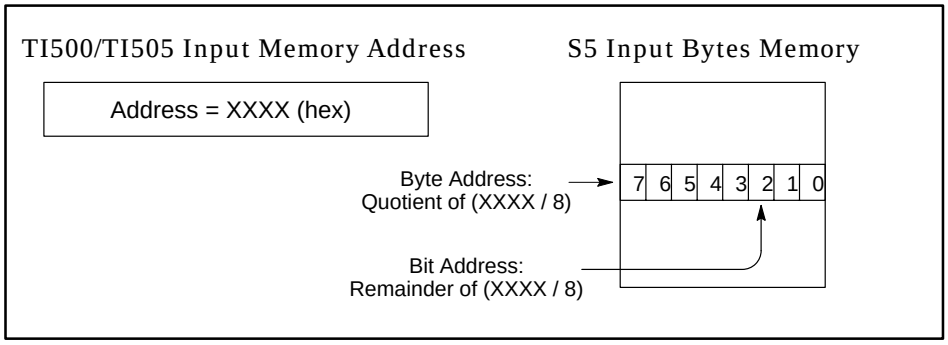

Value Conversion

When converting the value for Packed Discretes, the most significant bit (MSB) of the TI500/TI505 value corresponds to the least significant bit (LSB) of the S5. When converting the value for the Unpacked Discretes, the byte on/off state of the TI500/TI505 corresponds to the bit specified in the S5.

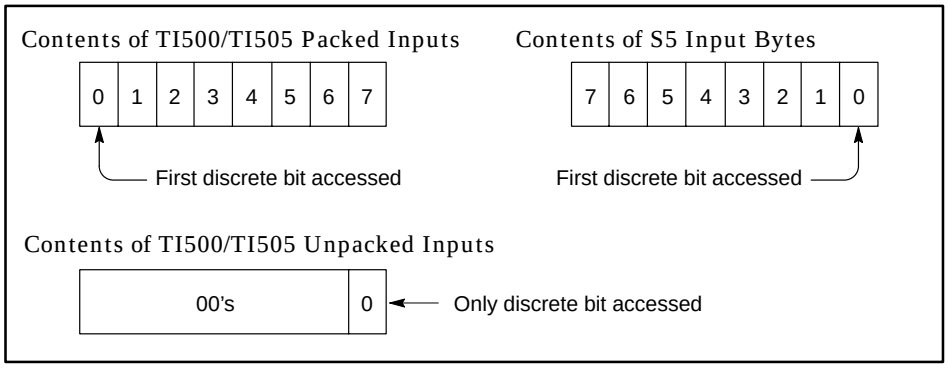

Reading and Writing

Reading the CP 525 E memory with the TT types 03 and 06 is supported. Writing to the CP 525 E memory with TT types 03 and 06 is ***not*** supported due to the functionality of the CP module itself.

A.6 Output Bytes — CP 525 'A' Type

Description

The S5 Output Bytes memory, as accessed through a CP module, refers to memory that is organized in 128 contiguous bytes of memory. Because the output image memory area (A memory) is accessible only if a corresponding I/O module is in use, the S5 PIM assumes no knowledge of the accessible memory area of the process output image. The TT types that map to this type of S5 memory are Packed Output Discretes (TT Type 07) and Unpacked Output Discretes (TT Type 04).

NOTE: If a TIWAY request is out of range, the exception returned will be of the form 80DD.

Address Mapping

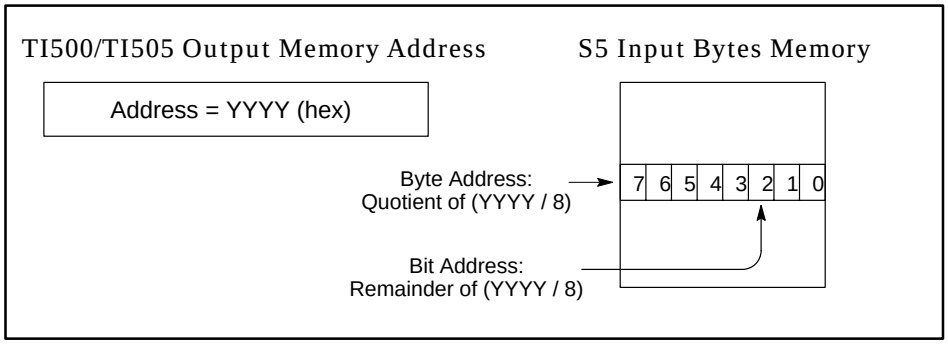

Value Conversion

When converting the value for Packed Discretes, the most significant bit (MSB) of the TI500/TI505 value corresponds to the least significant bit (LSB) of the S5. When converting the value for the Unpacked Discretes, the byte on/off state of the TI500/TI505 corresponds to the bit specified in the S5.

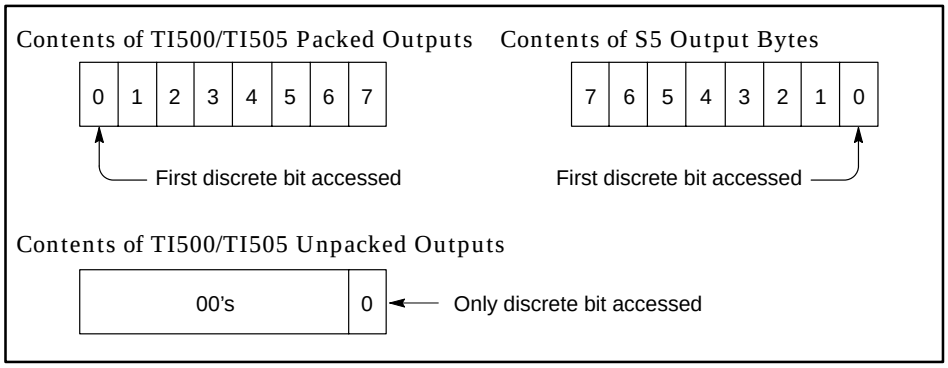

Reading and Writing

Reading the CP 525 A memory with the TT types 04 and 07 is supported. Writing to the CP 525 A memory with TT types 04 and 07 is ***not*** supported due to the functionality of the CP module itself.

A.7 Flag Bytes — CP 525 'M' Type

Description

The S5 Flag Bytes memory, as accessed through a CP module, refers to memory that is organized by 255 contiguous bytes of memory. The TT types that map to this type of S5 memory are Packed Control Register (TT Type 08) and Unpacked Control Register (TT Type 05).

Address Mapping

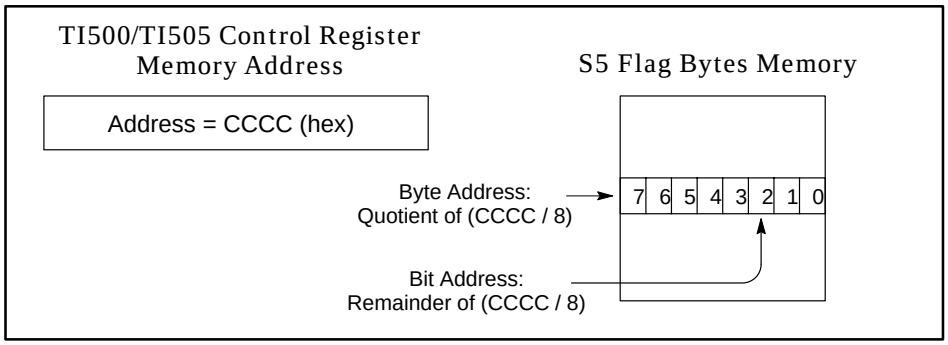

Value Conversion

When converting the value for Packed Control Registers, the most significant bit (MSB) of the TI500/TI505 value corresponds to the least significant bit (LSB) of the S5. When converting the value for the Unpacked Control Registers, the byte on/off state of the TI500/TI505 corresponds to the bit specified in the S5.

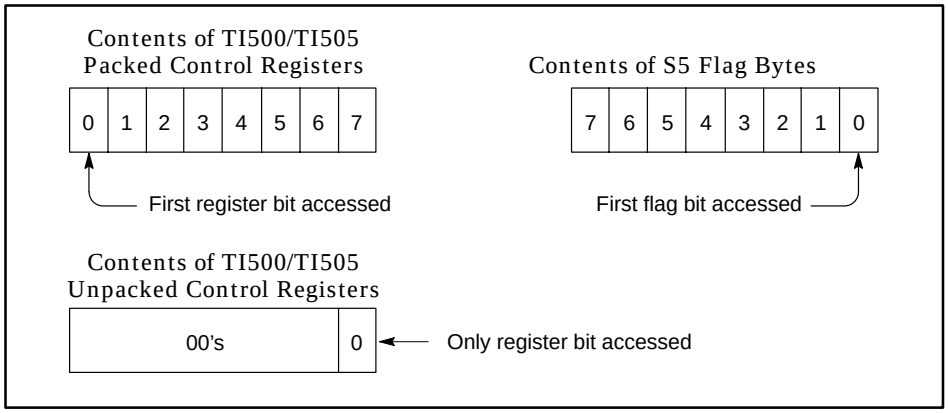

Reading and Writing

Reading the CP 525 M memory with the TT types 05 and 08 is supported. Writing to the CP 525 M memory with TT types 05 and 08 is ***not*** supported due to the functionality of the CP module itself.

A.8 Timer — CP 525 'T' Type

Description

The S5 Timer memory, as accessed through a CP module, refers to memory that is organized by 256 contiguous words of memory. Because the accessible timer memory is different for different CPUs, the S5 PIM assumes no knowledge of the accessible memory ranges for timer memory. The TT types that map to this type of S5 memory are Timer Current (TT Type 14) and Timer/Counter Current (TT Type 0F). The Timer/Counter Current TT Type 0F will access S5 Timer memory only, thus no access to S5 Counter memory will be provided through TT Type 0F.

NOTE: If a TIWAY request is out of range, the exception returned will be of the form 80DD.

Address Mapping

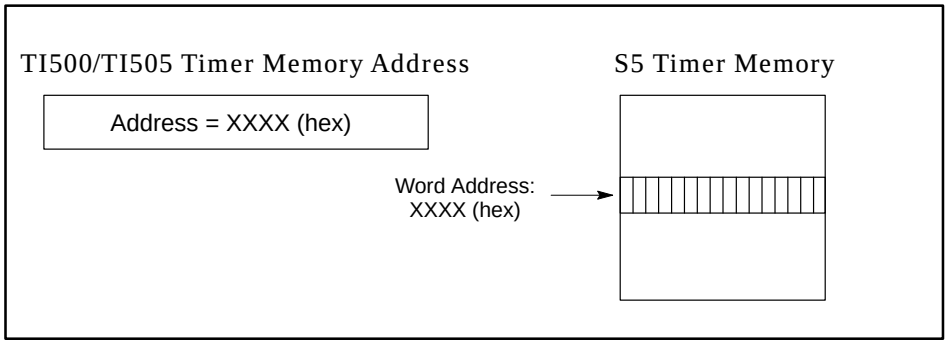

S5: Word Address = XXXX (hex) in Timer T memory.
TI500/TI505: XXXX (hex) in Timer memory of Timer/Counter memory.

Value Conversion

When converting the value for S5 Timers, the time value of the S5 Timer is copied directly, and the remaining bits are set to zero.

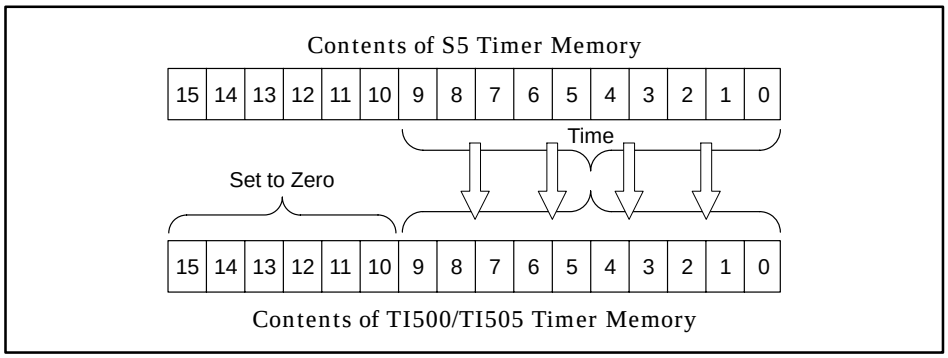

Reading and Writing

Reading the CP 525 T memory with the TT types 0F and 14 is supported. Writing to the CP 525 T memory with TT types 0F and 14 is ***not*** supported due to the functionality of the CP module itself.

A.9 Counter — CP 525 'Z' Type

Description

The S5 Counter memory, as accessed through a CP module, refers to memory that is organized by 256 contiguous words of memory. Because the accessible Counter memory is different for different CPUs, the S5 PIM assumes no knowledge of the accessible memory ranges for Counter memory. The TT type that maps to this type of S5 memory is Counter Current (TT Type 16). The Timer/Counter Current TT Type 0F accesses S5 Timer memory only, thus no access to S5 Counter memory is provided through TT Type 0F.

NOTE: If a TIWAY request is out of range, the exception returned will be of the form 80DD.

Address Mapping

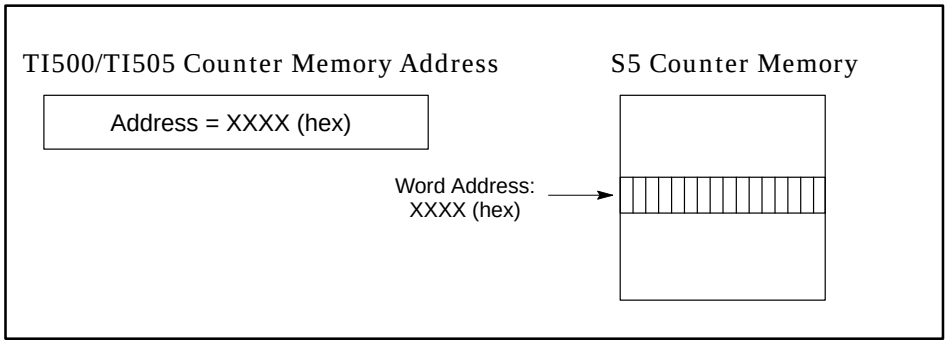

S5: Word Address = XXXX (hex) in Counter Z memory.
TI500/TI505: XXXX (hex) in Counter Current memory.

Value Conversion

When converting the value for S5 Counters, the S5 counter current value is copied directly, and the remaining bits are set to zero.

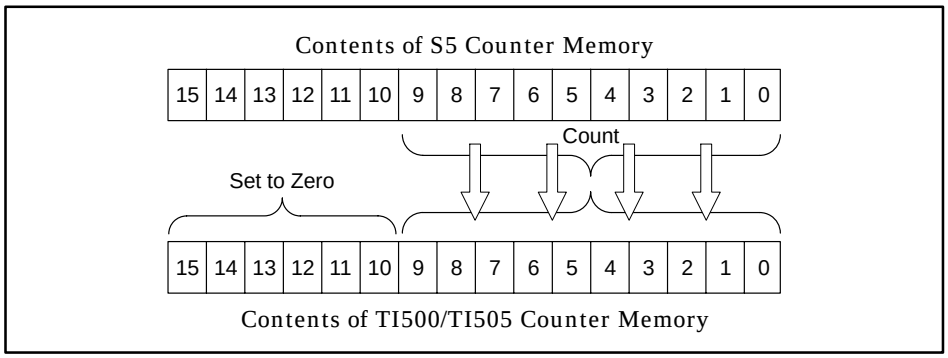

Reading and Writing

Reading the CP 525 Z memory with the TT type 16 is supported. Writing to the CP 525 Z memory with TT type 16 is ***not*** supported due to the functionality of the CP module itself.

A.10 S5 Data Types Not Supported by S5 PIM

Due to significant differences in the internal memory structure and architecture between the TI500/TI505 PLCs and the S5 PLCs, no compatible memory translations to these specific S5 data types are available.

Analog I/O Bytes: CP 525 'P' Type

The S5 Analog I/O Bytes memory type as accessed through a CP module is not supported by the S5 PIM.

Access to Analog I/O will be through Data Block memory, which implies that all analog conversions will be taken care of in the STEP 5 program. This was determined because of the significant differences in the internal memory representation of analog I/O.

Extended Analog I/O Bytes: CP 525 'Q' Type

The S5 Extended Analog I/O Bytes memory type as accessed through a CP module is not supported by the S5 PIM.

Access to Extended Analog I/O will be through Data Block memory, which implies that all analog conversions will be taken care of in the STEP 5 program. This was determined because of the significant differences in the internal memory representation of analog I/O.

Absolute Address: CP 525 'S' Type

The S5 Absolute Address memory type as accessed through a CP module is not supported by the S5 PIM.

System Address: CP 525 'B' Type

The S5 System Address memory type as accessed through a CP module is not supported by the S5 PIM.

Appendix B

TIWAY I Primitives Supported by S5 PIM

Overview

TIWAY I Primitives provide a uniform command level access to industrial devices through the TIWAY I Industrial Local Area Network. This section describes the set of primitives supported by the S5 UniLink Adapter*.

Exception

The S5 PIM supports the following exception field values.

Request: None
Response: LLLL 00 PP DDDD

Symbol	Value	Definition
PP		Request primitive code that contains the exception.
DDDD	0000	The primitive code is not implemented in the S5 PIM.
	0001	There is no corresponding S5 memory type that maps to the TT type supplied.
	0002	Data element location (specified by TT) is out of range (*see Note*).
	0003	Primitive has excess data unit bytes.
	0004	Primitive has insufficient data unit bytes.
	0005	The number of information bytes received does not match the number of bytes specified in the field length.
	000A	The attached CP 525 module fails to respond.
	000E	Primitive not valid for the specified data type (TT).
	0010	The number of locations requested exceeds the maximum allowed (*see Note*).
	0011	The number assigned to a data acquisition block or record is not within the supported block or record range.
	0012	The block or record number requested has not been defined.
	0013	The number of data bytes in the requested blocks or records exceeds maximum number of bytes allowed by the primitive.
	0017	The attached device did not respond properly.
	0019	The resulting data element location formed by the starting address, plus the number of data elements to access, is out of range specified by TT.
	001A	Communications has not been established with the attached device.
	001D	The number of locations to access is zero (NNNN = 0).
	0024	An illegal IEEE floating-point value (an IEEE NaN, Not-a-Number) exists in a primitive write request.
	80DD	An exception was generated by the CP 525 module, and its byte value is contained in the DD field.

*This material assumes you have prior knowledge of TIWAY primitives. Refer to the *TIWAY Primitive Compatibility Specification* for specific details.

NOTE: The S5 PIM checks all requests based on the maximum memory ranges allowed by the CP module and assumes no knowledge of the actual memory ranges in the CPU. Thus if a request is inside the range of the CP module but outside the range of the CPU, the exception returned is 80DD.

Native

The Native primitive allows an embedded CP 525 command (DDDD ...) to be transferred to the attached device. The S5 PIM will not perform any conversion of the embedded command or corresponding response. The embedded command has a maximum length of 128 data information bytes, the maximum length the CP module supports. Do not request more information than 128 bytes can hold because follow on messages are not supported and the information will be lost.

Request: LLLL 01 DDDD ...
Response: LLLL 01 HH DDDD ...

Symbol	Definition
HH	Operational status (see *Status*).
DDDD	Defined by the type of device being accessed.

Status

Primitive 02 is the Machine Status primitive. It reports the current operational state of the attached device in common format for all types of attached devices. Listed below are the response field values supported by the S5 PIM.

Request: LLLL 02
Response: LLLL 02 HH EE FF GG

Symbol	Value	Definition
HH		Attached device operational status (mode).
	00	Operational and performing instruction data type and loop execution (RUN).
	80	Not operational due to a fatal error condition.
EE		Attached device auxiliary power source status.
	01	Auxiliary power source status not available.
FF		NIM operational status.
	00	Secondary adapter operational.
	02	Channel B (machine port) is not functional.
GG		Secondary Local / Remote Status.
	00	Secondary in remote mode.

Configuration

Primitive 03 allows the Primary to identify the types of devices that exist on the network.

Request: LLLL 03
Response: LLLL 03 HH DDDD EEEE FFFF GGGG IIII JJJJ KKKKKKKK PPPPPPPPPPPP

Symbol	Value	Definition
HH		Operational status (see *Status*).
DDDD	0100	UniLink Secondary Adapter.
EEEE	0000	Instruction data type memory size.
FFFF	FFFF	Variable data type memory size.
GGGG	FFFF	Constant data type memory size.
IIII	0000	Local input / output memory size.
JJJJ	0000	Global input / output memory size.
KKKKKKKK	0001FFFE	Total user memory size.
PPPPPPPPPPPP	02494067-0062	Software configuration control number (48 bits).

Primitive Format Configuration

Primitive 04 is the format primitive that allows you to determine the maximum length of the primitive acceptable to the Network Interface Module. The buffer length is returned in number of bytes.

Request: LLLL 04
Response: LLLL 04 NNNN MM EE FF GG BB ... BB

Symbol	Value	Definition
NNNN	010E	Primitive field length supported.
MM	20	Number of Data Acquisition Blocks supported.
EE	00	Number of Data Acquisition Records supported.
FF	00	Number of Data Type Definitions supported.
GG	02	Floating-point formats supported.

The BB field represents the primitives supported. The first byte represents primitives 0...7, the second byte represents primitives 8...15, and so on. A value of 1 means the corresponding primitive is supported and a value of 0 means it is not.

Read Block

Primitive 20 is a command to read a single contiguous block of data in the Secondary device. Read Block will access contiguous data element locations from a given data element location.

Request: LLLL 20 TT NNNN AAAA

Symbol	Definition
TT	Data element type.
NNNN	Number of locations.
AAAA	Data element location.

Response: LLLL 20 HH DD ... DD

Symbol	Definition
HH	Operational status (see *Status*).
DD	Data.

Read Random Block

Primitive 21 is a command to read several random blocks of contiguous memory.

Request: LLLL 21 TT NNNN AAAA (repeated)

Symbol	Definition
TT	Data element type.
NNNN	Number of locations.
AAAA	Data element location.

Response: LLLL 21 HH XX BB DD ... DD

Symbol	Definition
HH	Operational status (see *Status*).
XX	Number of blocks not processed due to error.
BB	Block numbers not processed due to error.
DD	Data requested.

Write Block

This primitive replaces contiguous data element locations from a given data element location with the data specified in the request.

Request: LLLL 30 TT AAAA DD ... DD

Symbol	Definition
TT	Data element type.
AAAA	Data element location.
DD	Data.

Response: LLLL 30 HH

Symbol	Definition
HH	Operational status (see *Status*).

Write Random Block

This primitive replaces the specified blocks of data element locations with the data included in the request.

Request: LLLL 31 TT NNNN AAAA DD ... DD (repeated)

Symbol	Definition
TT	Data element type.
NNNN	Number of locations.
AAAA	Data element location.
DD	Data.

Response: LLLL 31 HH XX BB ... BB

Symbol	Definition
HH	Operational status (see *Status*).
XX	Number of block writes not completed due to error.
BB	Block numbers not processed due to error.

Define Block

The Define Block primitive specifies up to 32 random blocks of data elements. The blocks are referenced by number, ranging from 1 to 20 (hex). A block, once defined, can be redefined to a different data element type and location by simply specifying that block number, and then providing the required information for a new block. A block can be restored to the initial state of "undefined" by setting the NNNN field to zero.

Request: LLLL 50 CC TT NNNN AAAA (repeated)

Symbol	Definition
CC	Block number (1 – 20) Hex.
TT	Data element type.
NNNN	Number of locations.
AAAA	Data element location.

Response: LLLL 50 HH

Symbol	Definition
HH	Operational status (see *Status*).

Gather Block

The Gather Block primitive specifies which blocks (as defined by the Define Block primitive) will be read. The blocks are specified through a 32-bit mask (EEEEEEEE).

Each bit position in the bit mask corresponds to a block that was defined with primitive 50, Define Block. A bit set to 1 indicates that the block is to be returned. A bit set to 0 means that the block will not be returned. You should not request more data than can be returned in a maximum length primitive frame. The response will return the data associated with the requested blocks, beginning with the lowest block number and increasing to the highest block number. A data block separator is not provided in the response.

Request: LLLL 51 EEEEEEEE

where EEEEEEEE is 32 bits, defined as:

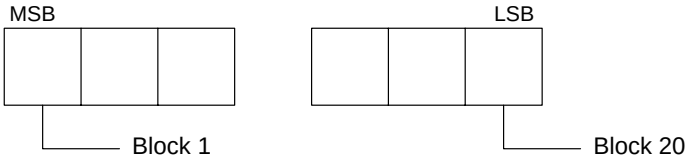

Response: LLLL 51 HH EEEEEEEE DD ... DD

Symbol	Definition
HH	Operational status (see *Status*).
EEEEEEEE	Bit mask (See above).
DD	Data.

Write and Gather Block

The Write and Gather Block primitive specifies which blocks (as defined with Define Block primitive 50) will be read. It also allows a user to replace any contiguous data element locations. The blocks are specified through a 32-bit mask (EEEEEEEE).

The Write occurs first, followed by the Gather. Refer to *Gather Block* for the bit masking information and other related items concerning the operation of this primitive.

Request: LLLL 52 EEEEEEEE TT AAAA DD ... DD

Symbol	Definition
EEEEEEEE	Bit mask (See above).
TT	Data element type.
AAAA	Data element location.
DD	Data.

Response: LLLL 52 HH EEEEEEEE DD ... DD

Symbol	Definition
HH	Operational status (see *Status*).
EEEEEEEE	Bit mask (See above).
DD	Data.

Appendix C

S5 Adapter/CP 525 Error Codes

C.1 S5 UniLink Adapter Primitive Exceptions

During operation, two possible error codes could be returned by the S5 UniLink Adapter: primitive exceptions, and CP 525 errors.

Primitive Exceptions

The error byte of a primitive exception contains one of the following.

Request: None
Response: LLLL 00 PP DDDD

Table C-1 Primitive Exception Error Byte

Symbol	Value	Definition
PP		Request primitive code that contains the exception.
DDDD	0000	The primitive code is not implemented in the S5 PIM.
	0001	There is no corresponding S5 memory type that maps to the TT type supplied.
	0002	Data element location (specified by TT) is out of range (*See Note*).
	0003	Primitive has excess data unit bytes.
	0004	Primitive has insufficient data unit bytes.
	0005	The number of information bytes received does not match the number of bytes specified in the field length.
	000A	The attached CP 525 module fails to respond.
	000E	Primitive not valid for the specified data type (TT).
	0010	The number of locations requested exceeds the maximum allowed (*See Note*).
	0011	The number assigned to a data acquisition block or record is not within the supported block or record range.
	0012	The block or record number requested has not been defined.
	0013	The number of data bytes in the requested blocks or records exceeds the maximum number of bytes allowed by the primitive.
	0017	The attached device did not respond properly.
	0019	The resulting data element location formed by the starting address, plus the number of data elements to access, is out of range specified by TT.
	001A	Communications has not been established with the attached device.
	001D	The number of locations to access is zero (NNNN = 0).
	0024	An illegal IEEE floating-point value (an IEEE NaN, Not-a-Number) exists in a primitive write request.

C.2 CP 525 Error Codes

Description of CP 525 Error Codes

If the CP 525 module responds with an error code, it is returned in the following 80DD word. The DD field will contain the CP 525 error code byte. In order to determine the meaning of this error code, you must refer the value DD to the appropriate CP 525 manual. These errors will have the same response format as the primitive exception errors.

Table C-2 CP 525 Error Code

80DD	An exception was generated by the CP 525 module, and its byte value is contained in the DD field.

Example CP 525 Error Code

An example of a CP 525 error would be if you tried to access an undefined data block. In this case, a value of 80DD would be returned, and the value DD contains the value associated with the CP 525 error code saying that the data block requested has not been defined.

Index

M

N

P

R

S

T

U

V

Customer Registration

We would like to know what you think about our user manuals so that we can serve you better. How would you rate the quality of our manuals?

	Excellent	Good	Fair	Poor
Accuracy	_____	_____	_____	_____
Organization	_____	_____	_____	_____
Clarity	_____	_____	_____	_____
Completeness	_____	_____	_____	_____
Overall design	_____	_____	_____	_____
Size	_____	_____	_____	_____
Index	_____	_____	_____	_____

Would you be interested in giving us more detailed comments about our manuals?

☐ **Yes!** Please send me a questionnaire.

☐ **No.** Thanks anyway.

Your Name: _____

Title: _____

Telephone Number: (_____)_____

Company Name: _____

Company Address: _____

_____

_____

Manual Name: S5 UniLink Adapter Installation and Operation

Assembly No.: 2587871–0065

Order Number: PPX:TIWAY–8126–2

Edition: Second

Date: 04/94

FOLD

NO POSTAGE
NECESSARY
IF MAILED
IN THE
UNITED STATES

BUSINESS REPLY MAIL

FIRST CLASS PERMIT NO.3 JOHNSON CITY, TN

POSTAGE WILL BE PAID BY ADDRESSEE

SIEMENS INDUSTRIAL AUTOMATION, INC.
3000 BILL GARLAND RD.
P.O. BOX 1255
JOHNSON CITY TN 37605–1255

ATTN: Technical Communications M/S 3519

FOLD